Schneider Electric

UFB-700M/900M

With cable exit in centre position and screw-fitted cover

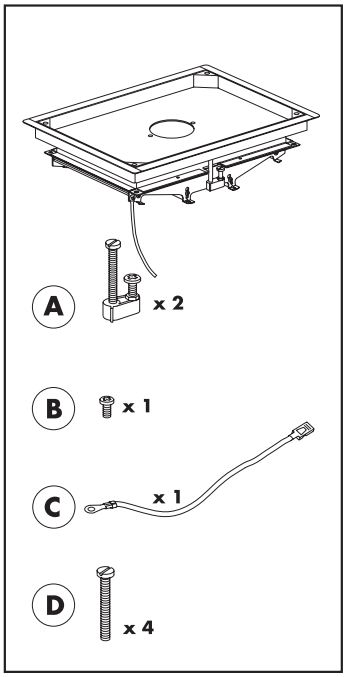

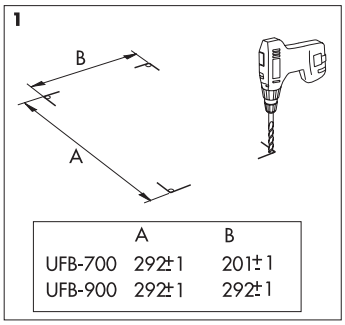

	A	B
UFB-700	292±1	201±1
UFB-900	292±1	292±1

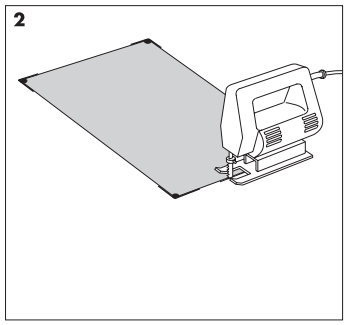

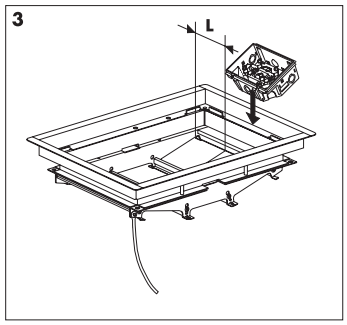

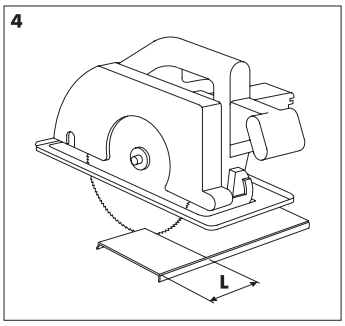

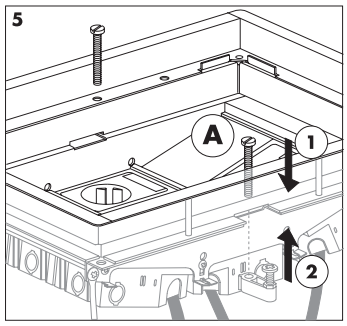

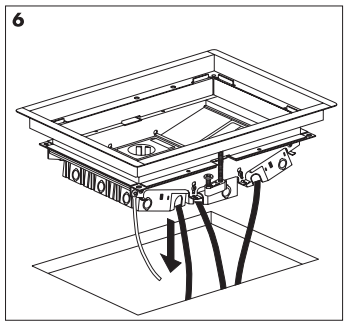

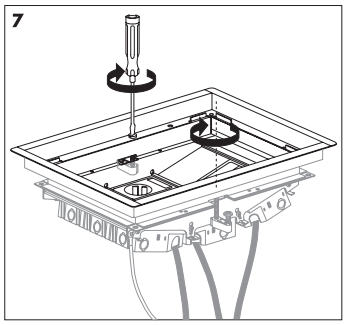

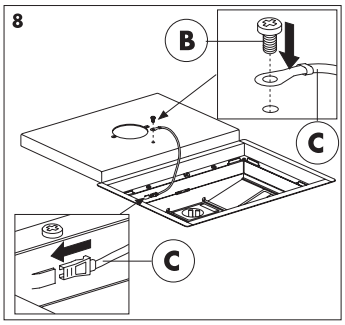

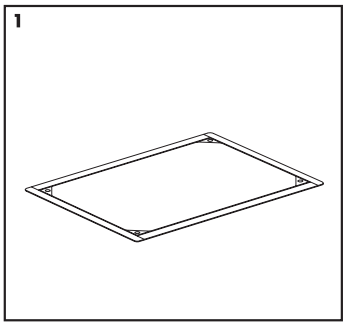

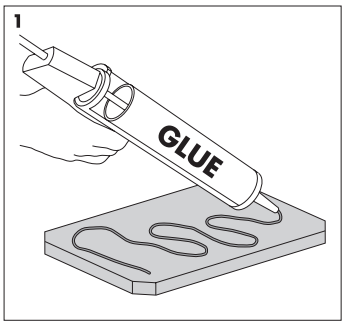

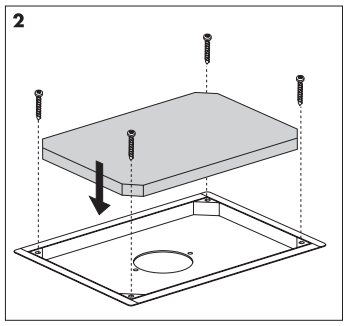

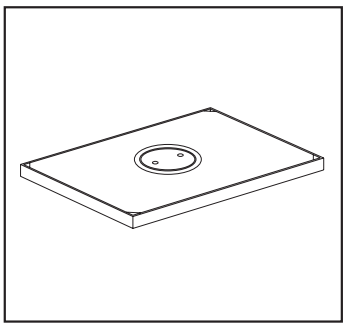

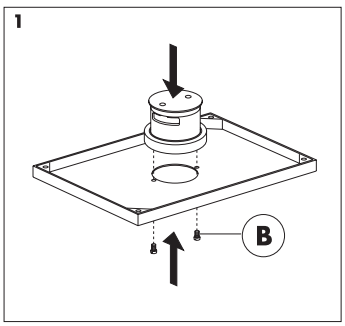

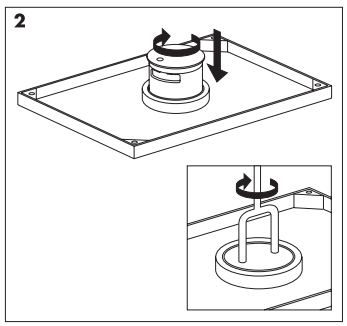

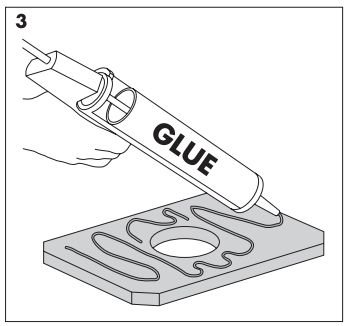

UFB-700M/900M

With cable exit in centre position and screw-fitted cover

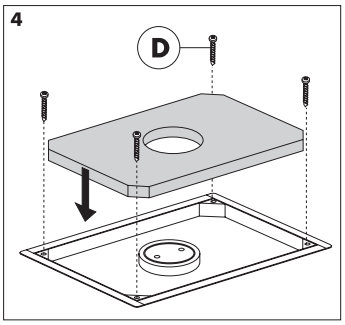

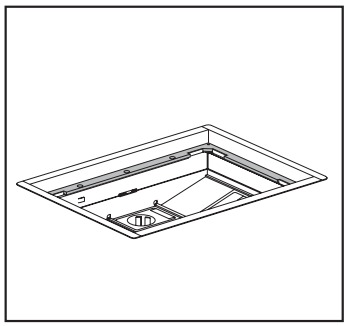

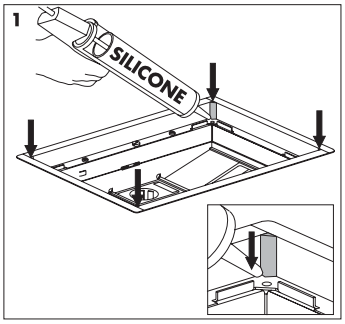

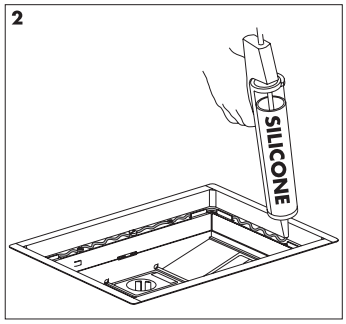

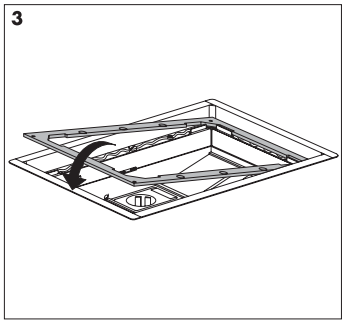

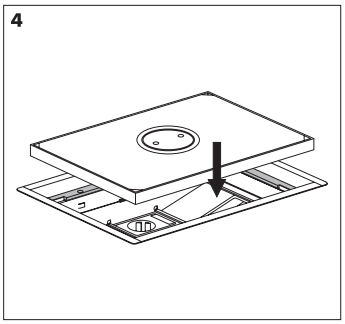

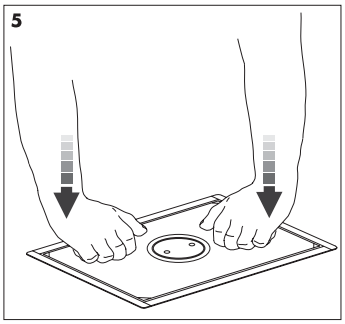

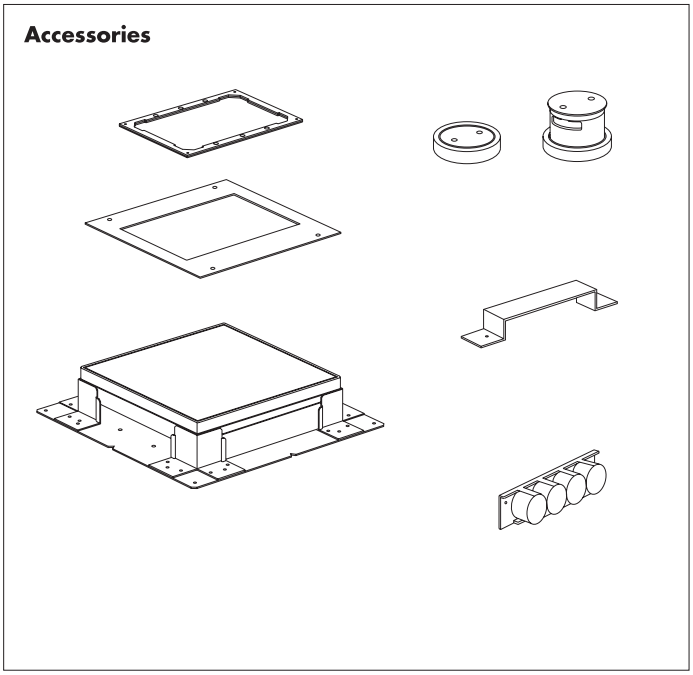

Art.No. 0075333 / 20060418 / 1008

Schneider Electric